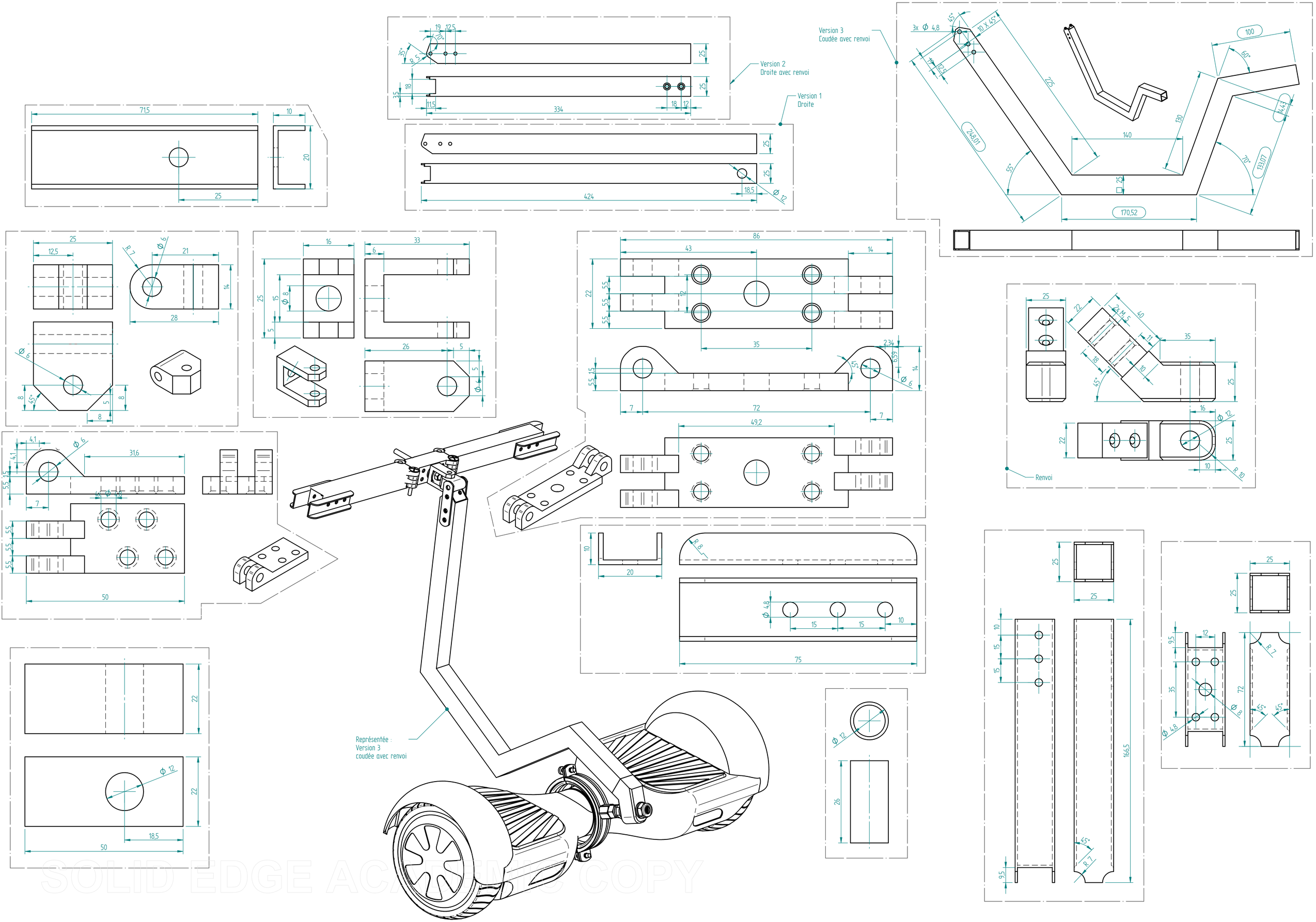

SOLID EDGE ACADEMIC COPY